ADATTATORE
N FEMMINA / N FEMMINA A VITONE
Cod. 221.0012

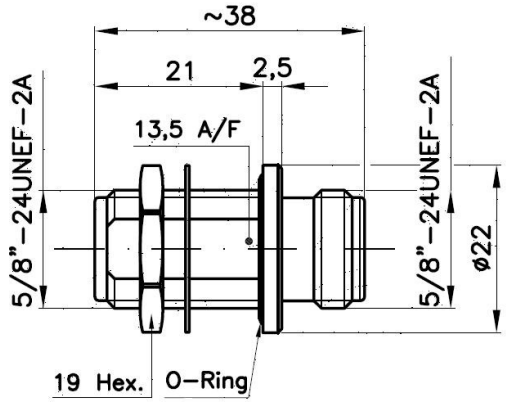

PANEL CUTOUT DIMENSIONS

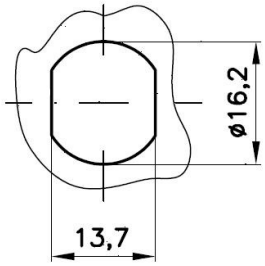

CHARACTERISTICS

Interface dimensions..... acc. to IEC 60169–16; CECC 122210

Material and finishings

Body and locknut..... Brass–ternary alloy plated
Center contact..... Spring bronze–gold plated
Insulator..... PTFE
Gasket..... Silicone rubber

Electrical

Impedance..... 50Ω
V.S.W.R..... ≤1,065 (30dB) up to 2,5GHz
≤1,12 (25dB) 2,5 to 5GHz
Insertion loss..... ≤0,05dB up to 5GHz
Insulation resistance..... ≥5GΩ
Center contact resistance (initial)..... ≤1mΩ
Outer contact resistance (initial)..... ≤0.25mΩ
Proof voltage..... 2,5KVeff.
Working voltage..... 1,4KVeff.

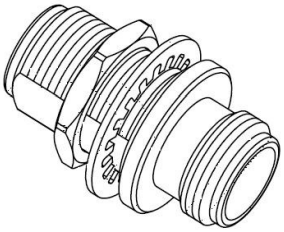

Mechanical

Coupling nut proof torque..... 1,7Nm
Recommended coupling nut torque.....0,7Nm to 1,1Nm
Center contact captivation(axial)..... ≥28N
Mating cycles..... ≥500

Environmental

Operating temperature..... –45°C to+85°C
Thermal shock..... as per CECC 122210 clause 4.6.7
Corrosion(salt mist)..... as per CECC 122210 clause 4.6.10
Vibration..... as per CECC 122210 clause 4.6.3
Shock..... as per CECC 122210 clause 4.6.4

RoHS compliant